Turbine Discharge Head Dimensions

The head and vertical column are often not of the same diameter as the wet end assembly,

heads are therefore listed below by size (nominal diameter of bore) rather than pump model.

Column and discharge head are usually of the same diameter.

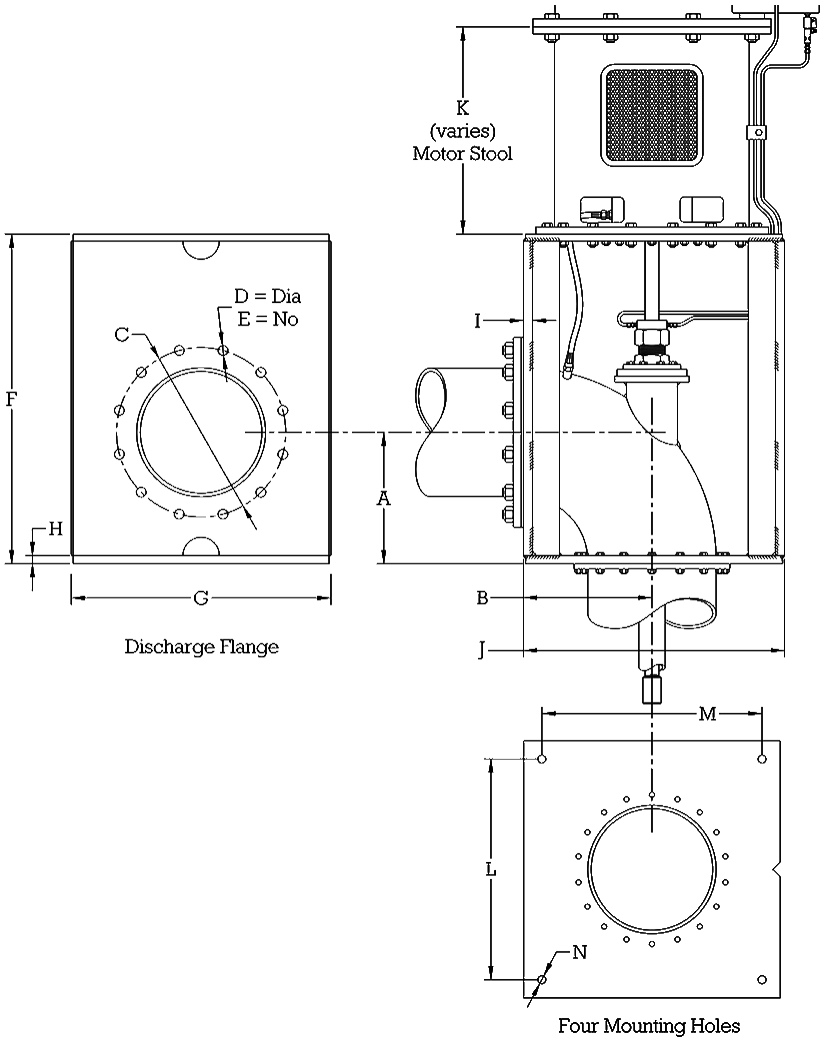

Head size = nominal bore; E = No of holes in discharge flange. Dimensions below (mm) may vary without notice.

HEAD SIZE		A	B	C	D	E	F	G	H	I	J	K	L	M	N
300mm 12"	fab	313	305	406	22	12	864	610	23	25	622	600 (typ)	533	533	21
350mm 14"	fab	364	356	470	27	12	913	711	23	25	723	600 (typ)	610	610	21
400mm 16"	fab	414	406	521	27	12	968	762	23	25	775	600 (typ)	660	660	22

Turbine Wet End Dimensions

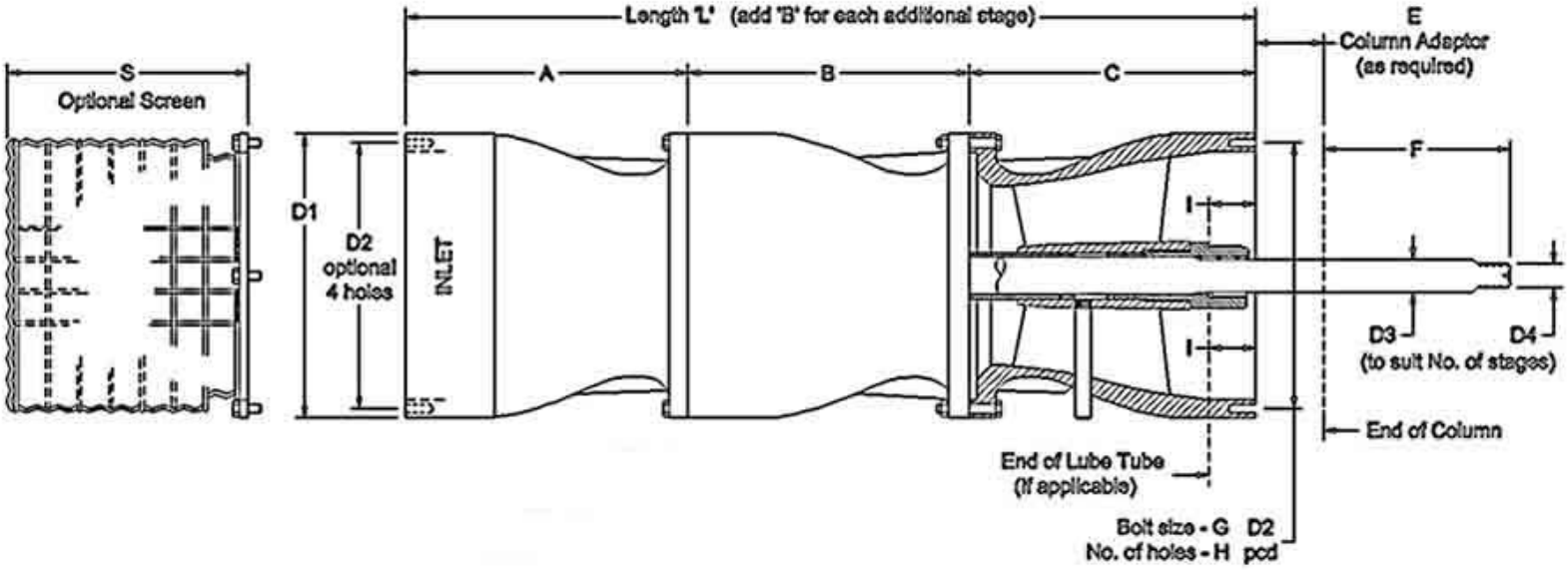

Shaft diameter D3 and thread D4 These diameters will vary with the number of impeller stages.

COLUMN ADAPTOR, dimension E, will vary according to the column diameter. Various screwed and flanged adaptors are available.

Dimension I, End of Lube Tube: (+) values indicate the lube tubes end beyond the end of discharge bowl by this amount (smaller pumps).

Dimensions (mm), may vary without notice.
Model prefix = Nom/bore [inches]

	A	B	C	D1	D2	D3	D4	E	F	G	H	I	L	S
MODEL														
6SE	127	121	127	132						screwed bowls		0	375	197
7SE	See below for 7SE drawing and dims.													
8HS	147	147	147	200	184					M8	8	+12.7	441	239
8SE	197	187	197	184	165					M10	8	22	581	239
10HS	200	200	200	241	222.3					M10	8	+12.7	600	281
10SE	238	225	225	241	222.3				254	M10	8	29	688	281
12MS	264	264	265	292	273				254	M10	12	38	793	324
14MB	368	371	368	362	336.6				254	M12	12	57	1107	366
14MC	See below for 14MC drawing and dims.													
14MD	See below for 14MD drawing and dims.													
16HC	384	384	391	387	362				254	M12	12	64	1159	328
36HC	See below for 36HC drawing and dims.													

Model 7SE - Wet End Dimensions

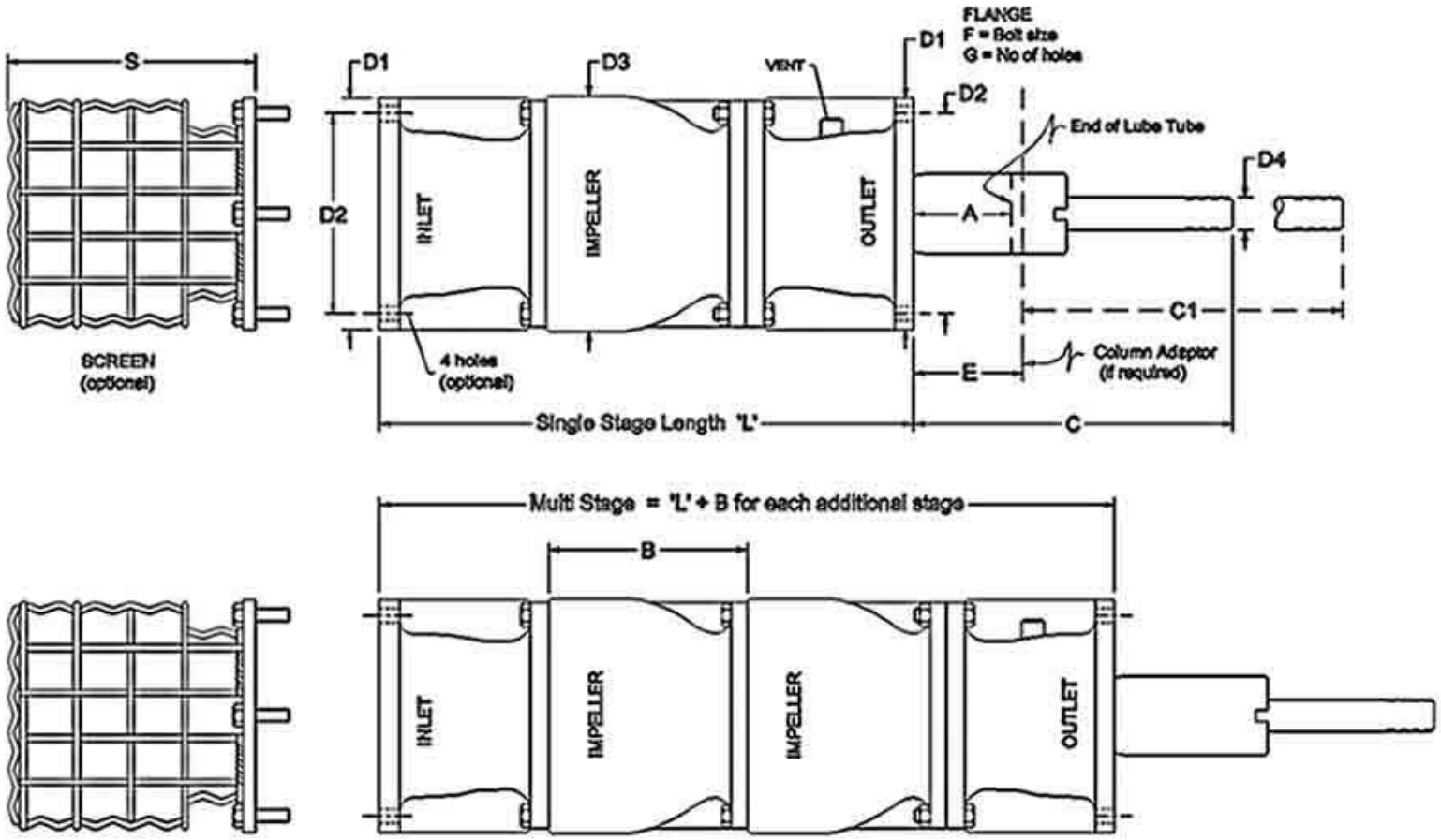

Dimensions (mm),
may vary without notice.

COLUMN ADAPTOR length E varies according to column dia.

	A	B	C	C1	D1	D2	D3	D4	E	F	G	L	S
MODEL													
7SE	77	158	254	254	185	160	187	25.4		M10	8	425	197

Models 14MC & 14MD - Wet End Dimensions

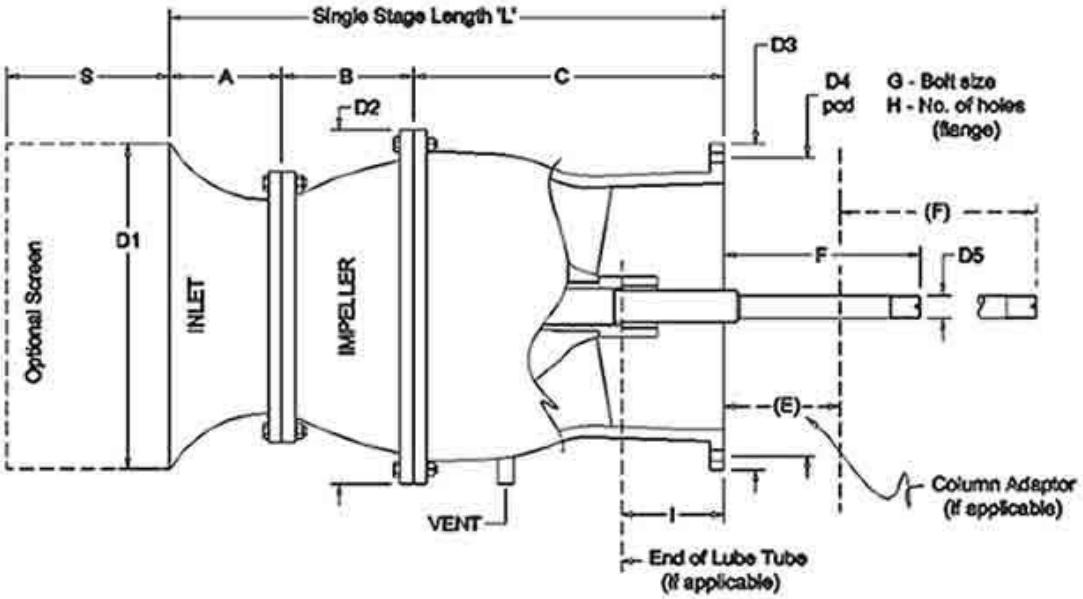

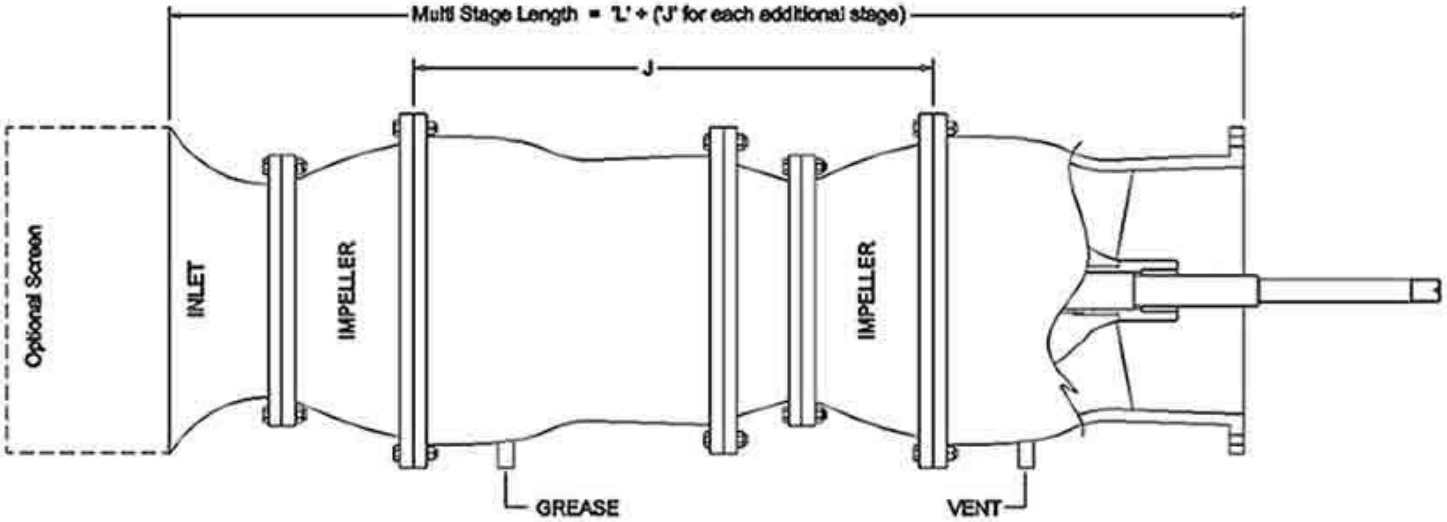

Note: Pumps 14MC & 14MD have the same external dimensions, differing only in impeller design.

Dimensions (mm), may vary without notice.

Line Shaft diameter D5 will vary, according to number of stages.

COLUMN ADAPTOR length E varies according to column dia.

	A	B	C	D1	D2	D3	D4	D5	E	F	G	H	I
MODEL													
14MC	159	185	437	458	495	459	419	1.25"		277	M12	12	144
14MD	159	185	437	458	495	459	419	1.25"		277	M12	12	144

Models 36HC - Wet End Dimensions

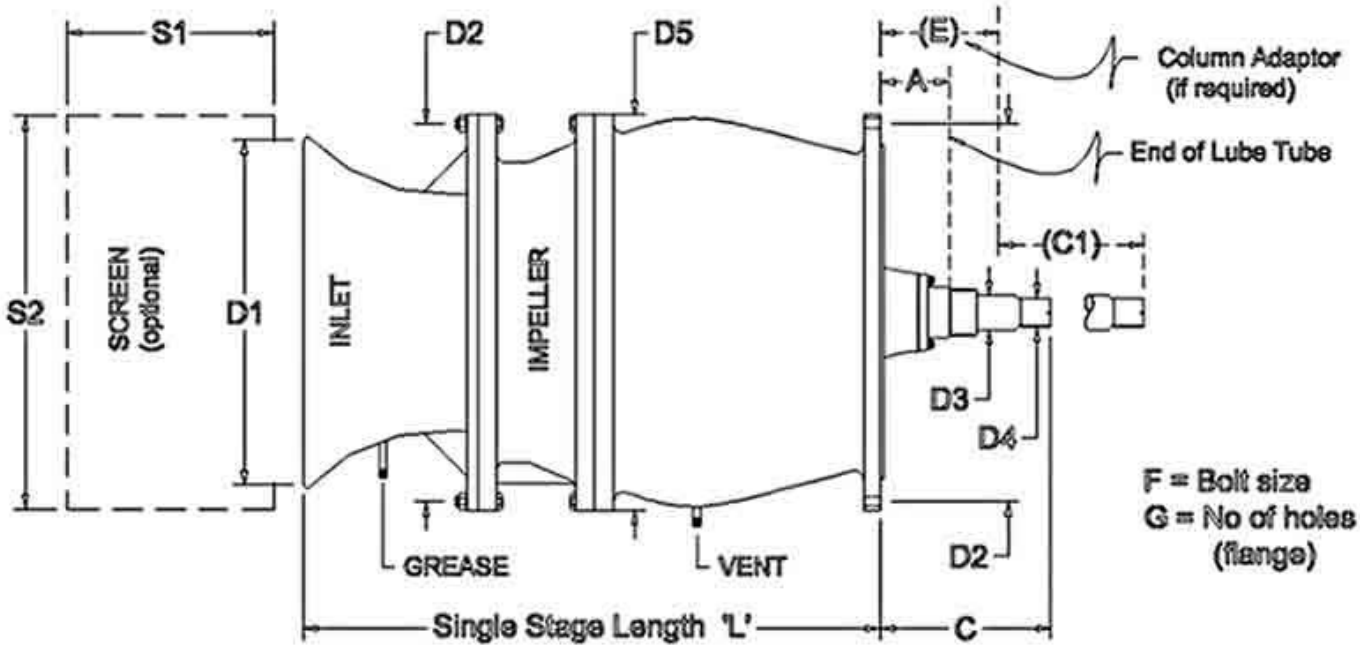

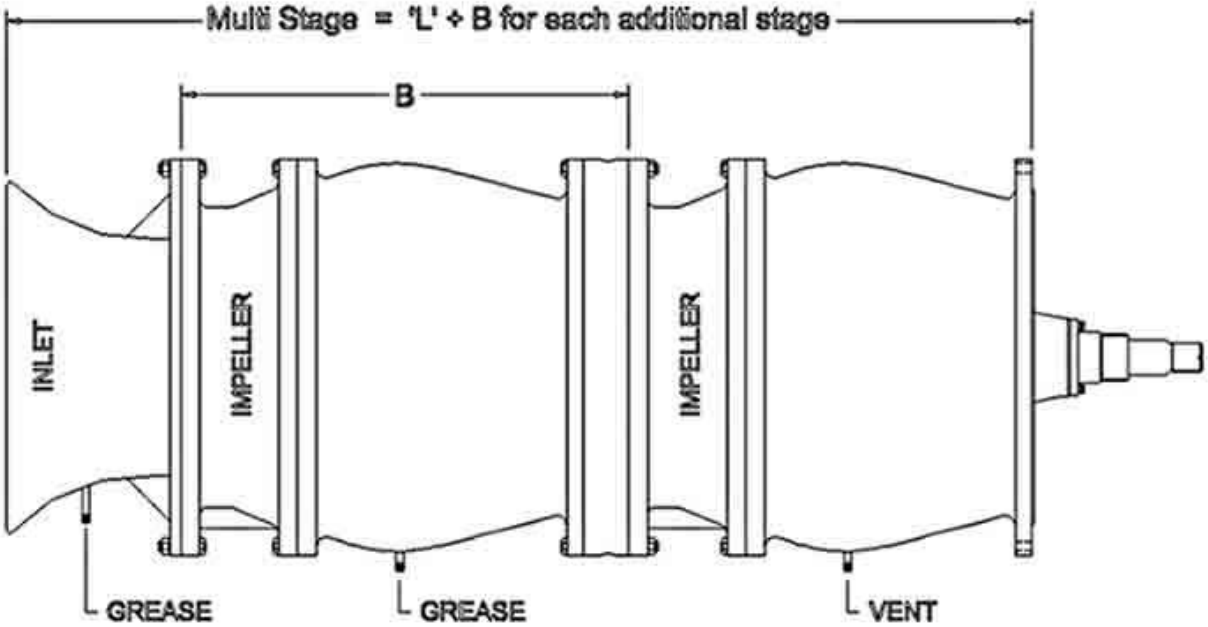

Dimensions (mm), may vary without notice.

Shaft diameter D3 and thread D4 will vary, to suit number of stages.

COLUMN ADAPTOR length varies according to column dia

	A	B	C	C1	D1	D2	D3	D4	D5	E	F	G	S1
MODEL													
36HC	153	994	379	254	765	838			876		M20	20	